1/10 SCALE CRAWLER EX86110 PIONEER

Specifications:

LENGTH	WIDTH	HEIGHT	WHEEL BASE	DIAMETER OF WHEEL	WIDTH OF WHEEL	GEAR RATIO	SERVO	WEIGHT
560mm	240mm	240mm	313mm	120mm	45mm	54:1	15kg	2600g

Spare Part

R86144 - Bumper Mounts	R86169 - Baffle （L/R）	R86170 - Footplate	R86171 - Footplate Spacer	R86145 - Front Bumper
R86146 - Rear Bumper	R86172 - ECS Cable Connector	R86173 - Servo Mount	R86174 - Receiver Cover & ESC Protection Holder	R86175 - Motor Cover / Slipper Cover
R86176 - Transmission Gear Housing Set	R86177 - Steering Mount	R86178 - Cable Clip	R86179 - Distribution Housing	R86029 - Battery Tray+ Batter Strap
R86180 - Chassis Plate	R86015- ESC Caster Mounts	R86021- Rear Straight Axle Cover	R86022 -Caster Mounts (L/R)	R86001- Front/Rear Gear Box
R86017 - Front/Rear body plates	R86181 - Main Gear 81T	R86044 -Pinion Cear（14T）	R86024 - LED Light Clip	R86006 - Differential Box
R86018 - Body Post F/R	R86182-Transmission Metal Gear Set (20T+20T+28T+53T)	R86009-Crown Gear(40T)	R86008- Drive Gear	R86183 - Gear Shaft Set
R86010 - Solid Axle Hub	R86209 - Servo link (50mm)	R86012 - Panhard Bar (51.8mm)	R86214 -Front Upper Link	R86035 -Rear Shaft

Spare Part

P860038-CVD Drive shaft	R86037 -Rear Upper Link (86mm)	R86038 -Rear Lower Link (102mm)	R86184 - Steering Link	R86040 -Side Guard
R86185 - Universal Drive Joint shaft	R86042 -Universal Drive Dogbone	R86005 - Link Mount Sct	R86186 - Motor Mount	R86045 -King Pin Bushing 8P
R86046 - Ball Bearing ϕ15*ϕ10*ϕ4	R86047 - Ball Bearing ϕ10*ϕ5*ϕ4	R86048 -Ball Stand ϕ5.9 (Short) 8P	R86049 -Ball Stand ϕ5.9 (Long) 6P	R86050 -Wheel Hex. W/Pins(2*10)
R86051 -Nylon Nut M3	R86052 -Flange M4 Lock Nut	R86053 -Grub Hex. Screw M3*3 R86054 -Grub Hex. Screw M4*4	R86055 - Servo Washers ϕ3*8*0.8mm	R86208 - Flange Nut M3
R86057 - Gasket	R86187 - Slipper Spring	R86188 - Slipper Plate R86189 - Slipper Spacer	R86211 -Ball Stand ϕ5.9 6P	R86066 -Button Head 3*25 Metric Hex Screw 8P
R86062 -Button Head 3*14 Metric Hex Screw 8P	R86063 -Button Head 3*16 Metric Hex Screw 8P	R86064 -Button Head 3*18 Metric Hex Screw 8P	R86065 -Button Head 3*20 Metric Hex Screw 8P	R86058 -Cap Head Hex Machine Screw 3*6 8P
R86059 -Button Head 3*8 Metric Hex Screw 8P	R86067 -Button Head 3*28 Metric Hex Screw 8P	R86068 -Flat Head Hex Machine Screw 3*8 8P	R86203 - Flat Head Hex Screw 2*5	R86072 -Flat Head Hex Machine Screw 2.5*10

Spare Part

R86071 -Column Head Hex. Self-tapping Screw2.5*8	R86060 -Button Head 3*10 Metric Hex Screw 8P	R86204 - Button Head Hex Screw 3*4	R86205 - Button Head Hex Screw 3*15	R86206 - Column Head Hex Screw 3*12
R86193 - Shock Absorbers	R86076 - Servo 15KG R86210 - Servo horn	R86194 - Motor (Rc550 -17T)	R86074 -ESC	R86075 -Battery Ni-MH (7.2V 2000mAh)
R86195 - Front & Rear Bumper LEDs Wires	R86086-Body Shell Light	R86196 - Y Lead	R86197 - Rear Mirror + Wiper	R86229 -Body roll caye
R86198 - Snorkel	R86230 - Roll caye LED	P860037 - Winch controller (Optionals)		
R86199 - Grill LED Light Set	R86200 (Champagne) R86200-1 (Blue) R86200-2 (Yellow) R86200-3 (Clear) PC body	R86190 - Wheel (pr)	R86191 - Tire with foam (L/R)	R86192 - Premounted Tire & Wheel Set (L/R)

Upgradable Optionals

P860001- Shock Absorber	Portal Axle Box Cover (AL.) P860002 (Red) P860002-1(Silvery)	P860033 - Chassis Plate (AL.)	P860018-straight axle mount	P860005- Mount for Link (AL.) P860006- Sway Bar Lower Mount (AL.)
P860011- Caster Mounts (AL.) (L/R)	P860007- Sway Bar Upper Mount (AL.)	R86148 - Battery Tray+ Batter Strap	P860009- Front/Rear body plates (AL.)	P860034 - Distribution Housing (AL.)
P860008- Rear Straight Axle Cover (AL.)	P860010- Steering Mount (AL.)	Carbon Fiber		
P8600014-CVD central Drive shaft	P860035 - Transmission Gear Housing Set (AL.)	P860036 - Motor Cover (AL.)	P860031 - Front Bumper (AL.)	R860032 - Rear Bumper (AL.)

Front Drive System Assemble

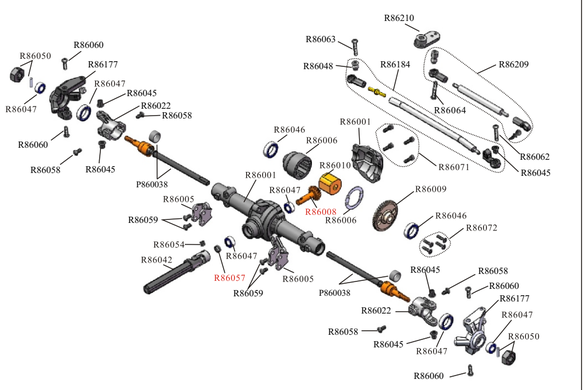

Front Component Assemble

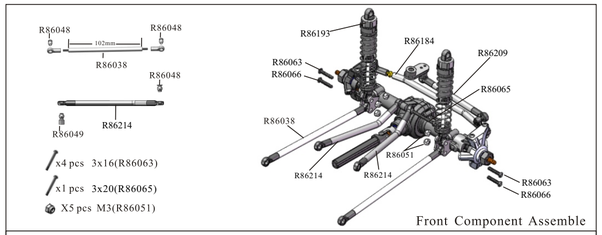

Rear Component Assemble

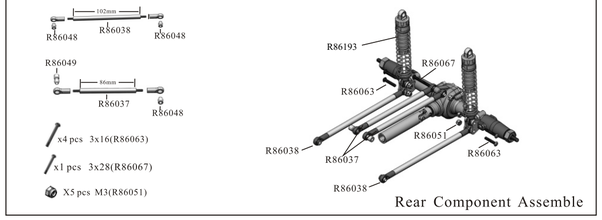

Rear Drive System Assemble

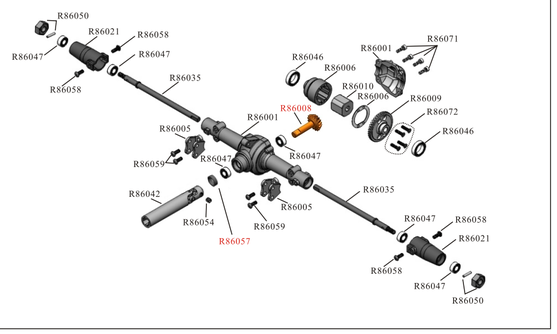

Assemble Left and Right Beam

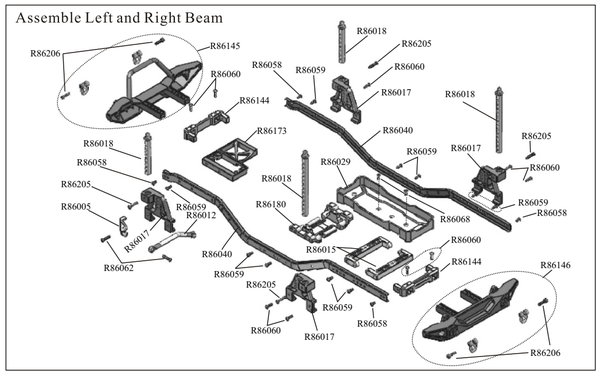

Transmission Box Set

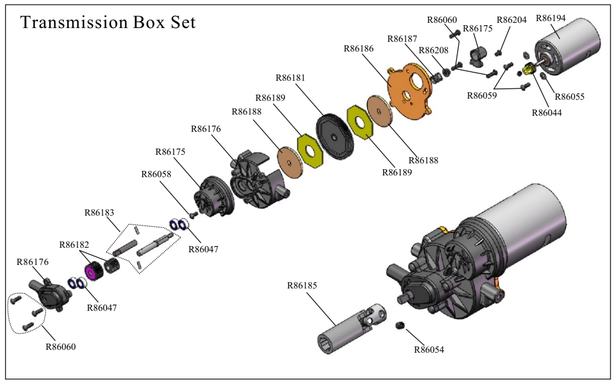

Drive Gear Set

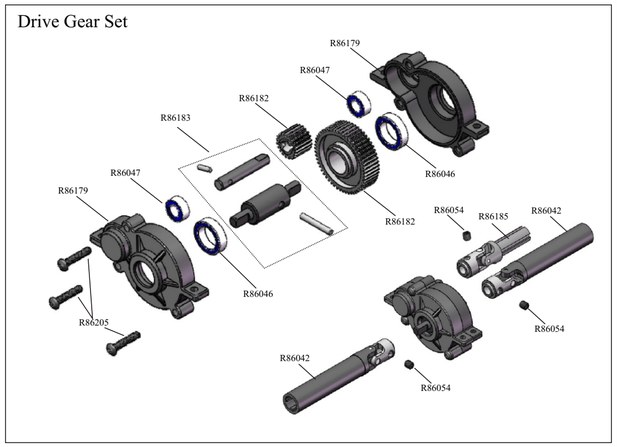

Transmission Box Set Assembly

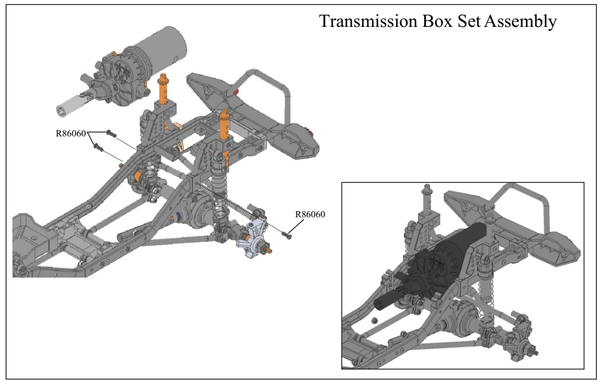

Assemble Electric System

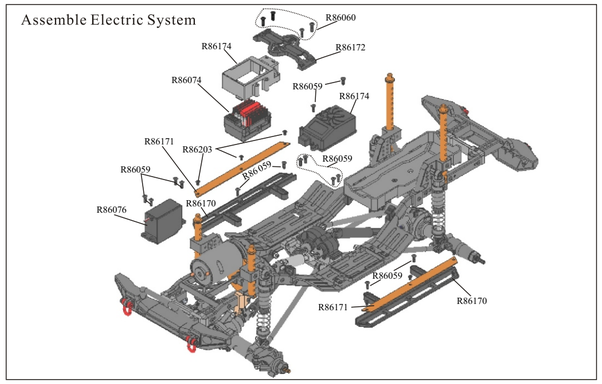

(Left & Right) Foot Plate Assembly

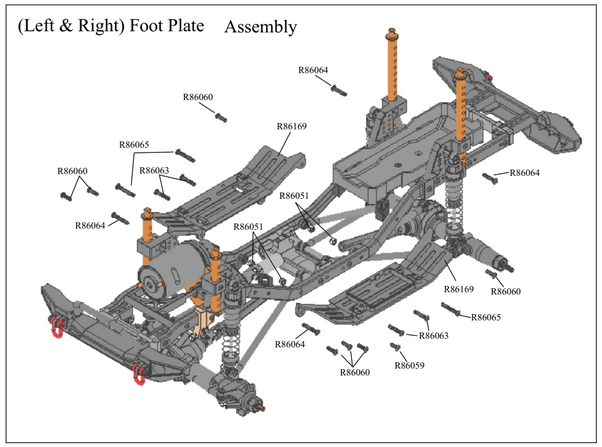

Wheel/Battery Assembly

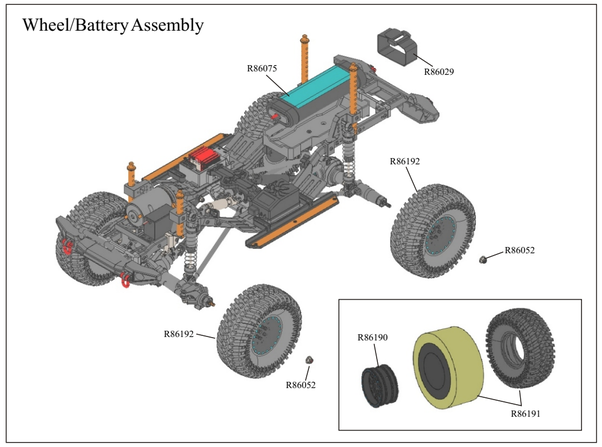

8611020190628